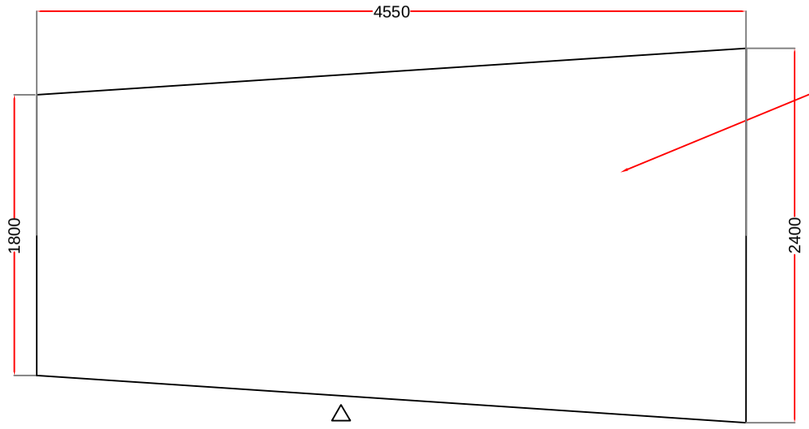

PLAN

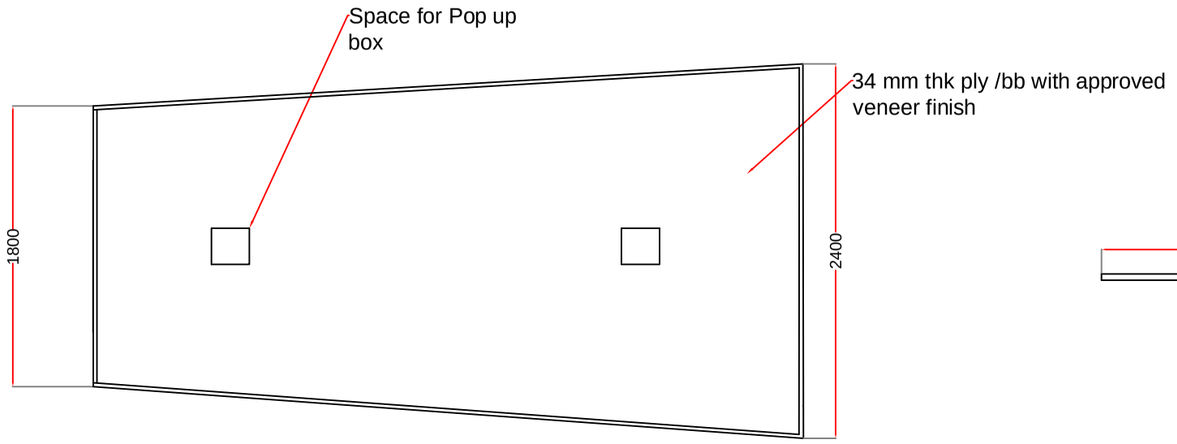

PLAN WITH TABLE TOP

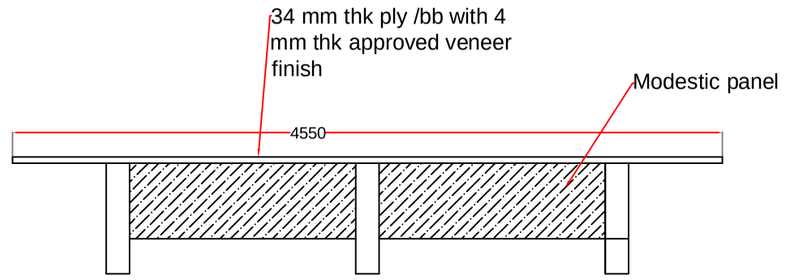

VIEW A

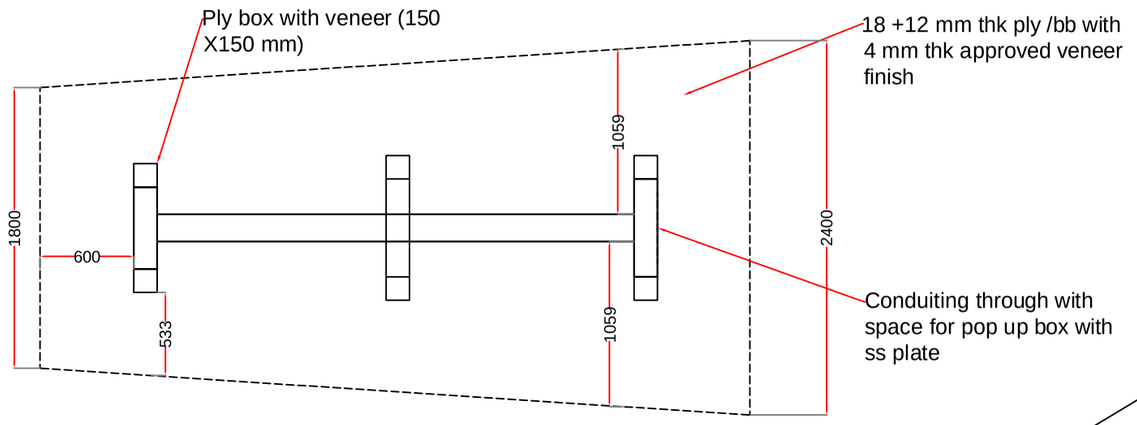

Under structure Plan

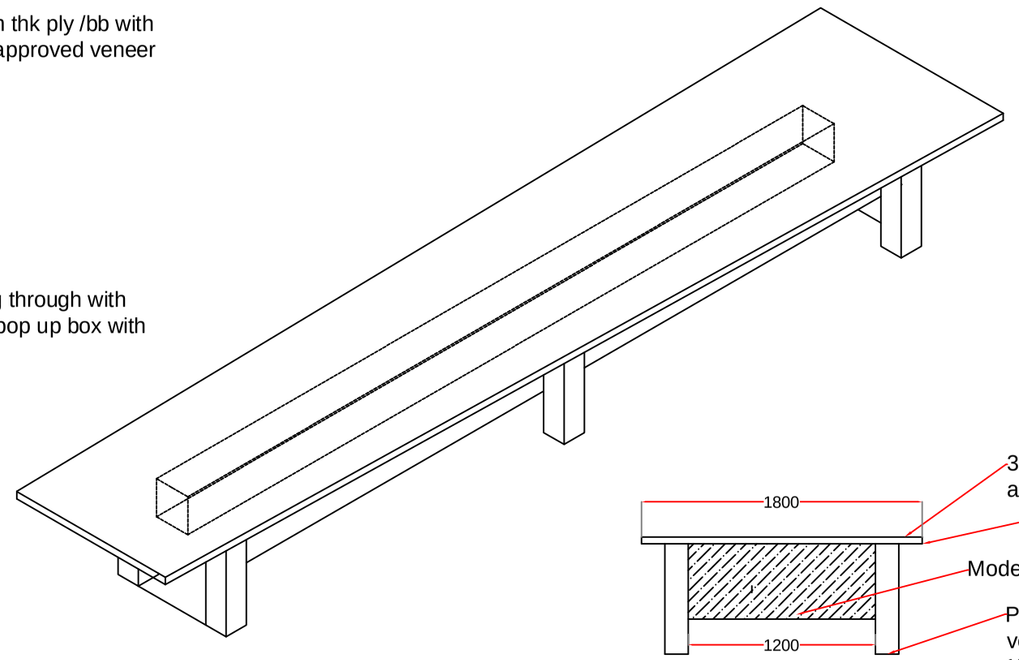

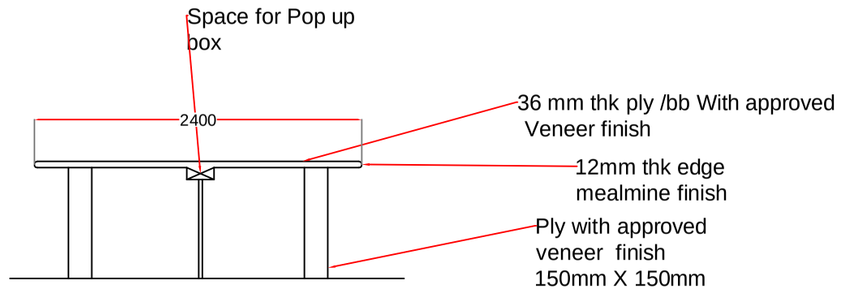

Section X-X

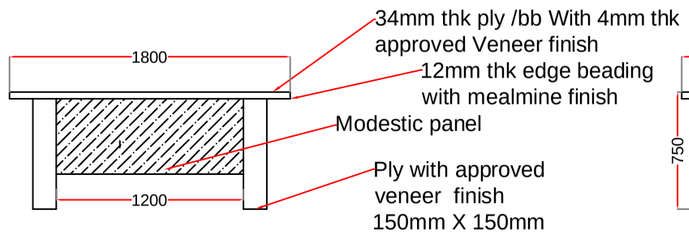

VIEW C

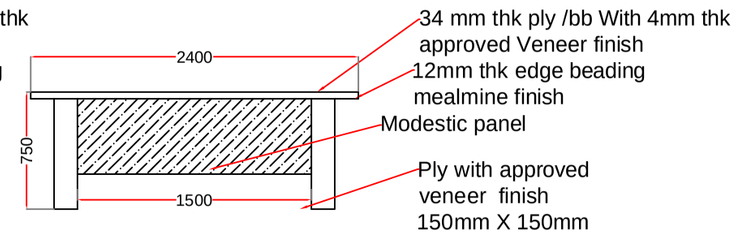

VIEW B

BOARD ROOM TABLE

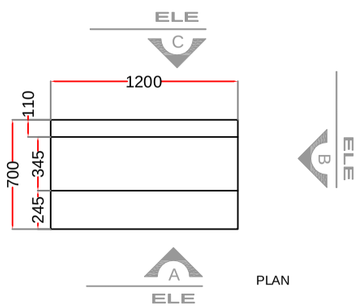

PLAN

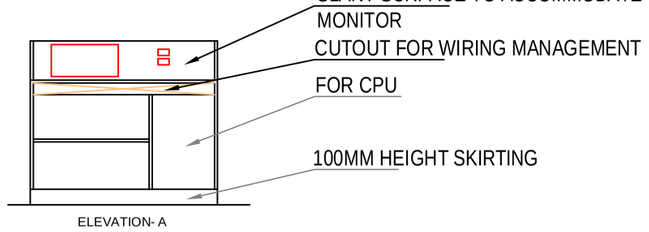

ELEVATION- A

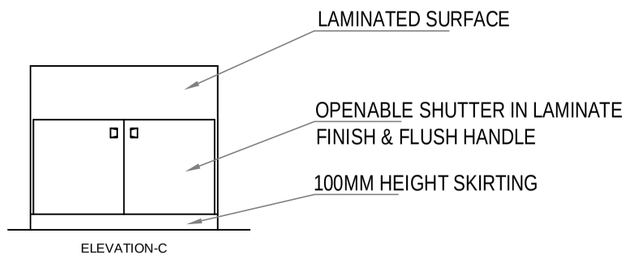

ELEVATION-C

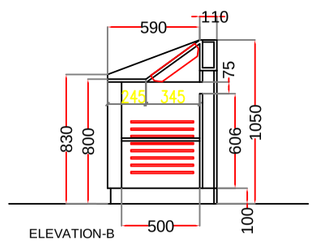

ELEVATION-B

INSTRUCTOR TABLE

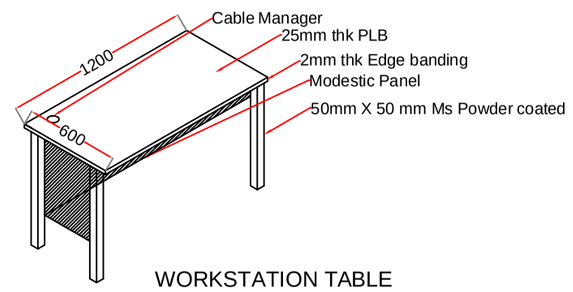

WORKSTATION TABLE

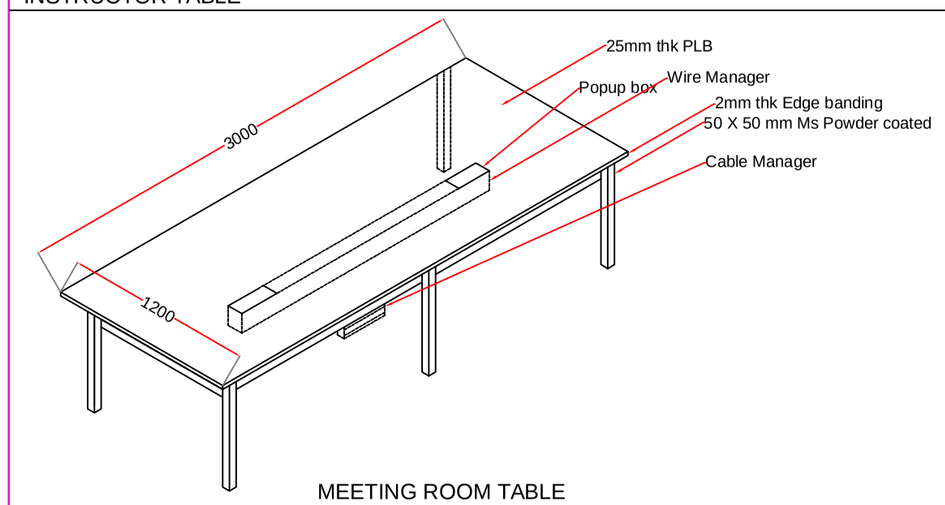

MEETING ROOM TABLE

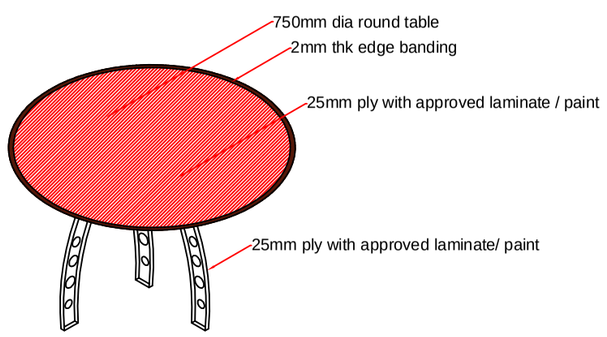

DISCUSSION ROOM TABLE

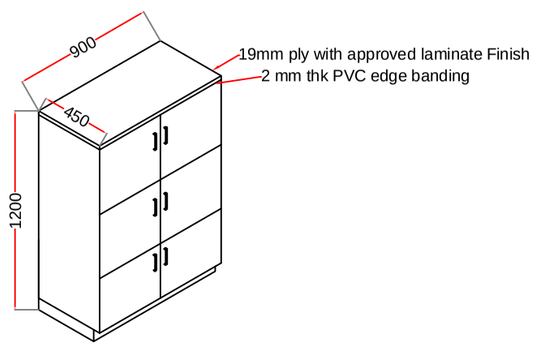

STORAGE

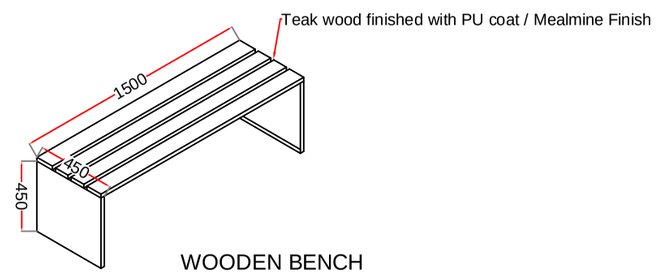

WOODEN BENCH

GENERAL NOTE:

1. ALL DIMENSIONS ARE IN MM.
2. ALL DIMENSIONS ARE TO BE CHECKED ON SITE. ANY QUARIES TO BE CLARIFIED WITH THE ARCHITECT.
3. ALL LEVELS ARE IN MM, UNLESS STATED OTHERWISE.
4. ALL COLUMN LOCATIONS ARE TENTATIVE AND ARE SUBJECTED TO CHANGE POST DETAILED STRUCTURAL ANALYSIS.

KEY PLAN:

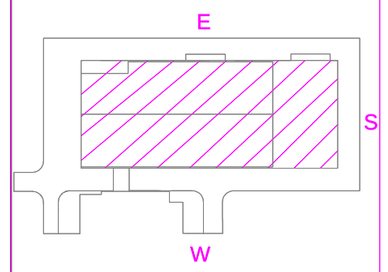

ISSUAL STATUS

DATE	DESCRIPTION	SIGN

REVISION STATUS

DATE	DESCRIPTION	SIGN

PURPOSE OF ISSUE:

GFC

Date 26.10.2020 Sign.....

For: NU ASSOCIATES

PROJECT NAME:

PROPOSED ACADEMIC RAMANUJAN BLOCK - PHASE-II

CLIENT NAME:

INTERNATIONAL INSTITUTE OF INFORMATION TECHNOLOGY, BENGALURU
Hosur Road,Electronic city, Bengaluru-560100

ARCHITECTURAL & ENGINEERING CONSULTANTS:

NU ASSOCIATES
NO. 940, 1st floor, Shantha Complex,
20th main road, BSK II Stage
Bengaluru - 560 070. India
email : architect@nuassociates.com

ORIENTATION | WIND | SUN

DRAWING TITLE:

SECOND FLOOR FURNITURE DETAILS

PROJECT REFERENCE NO: 0192			I
DRAWING NO:	NU-0192-I-WD- 002	REV	R2
DRAWN BY	NGRJ	DESIGNED BY	RKG
CHECKED BY	RKG	SHEET	A2
DATE	29/05/2019	SCALE	1 : 125